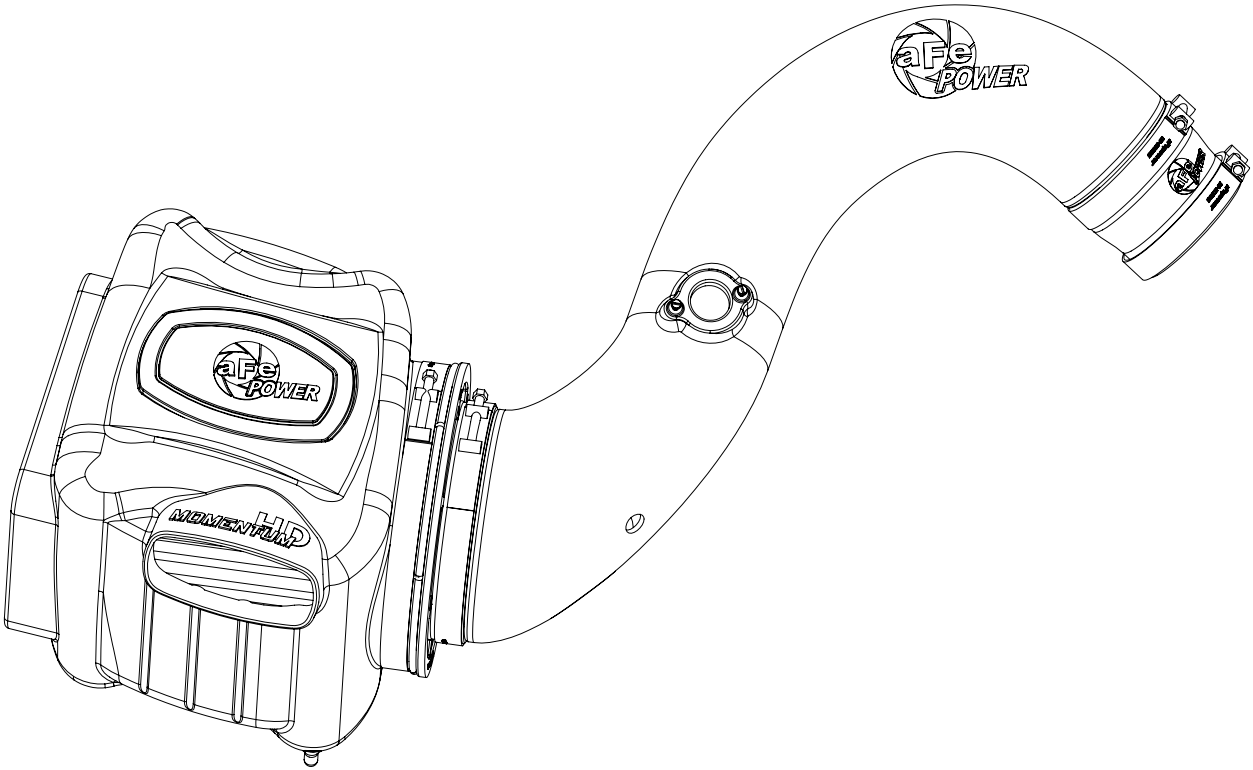

advanced FLOW engineering

Instruction Manual P/N: 51-74002/54-74002/75-74002

Make: **GM** Model: **Diesel Trucks** Year: **2004.5-2005** Engine: **V8-6.6L (td) LLY**

- **Please read the entire instruction manual before proceeding.**
- **Ensure all components listed are present.**
- **If you are missing any of the components, call customer support at 951-493-7100.**
- **Ensure you have all necessary tools before proceeding.**
- **Do not attempt to work on your vehicle when the engine is hot.**

Retain factory parts for future use.

Label	Qty.	Description	Part Number
A1	1	Air Filter (Pro 5R)	24-91059
A2	1	Air Filter (Pro DRY S)	21-91059
A3	1	Air Filter (Pro GUARD 7)	72-91059
B	1	Tube	05-74002B1
C	1	Housing	05-74003B2-S
D	2	Screw, M4 x .7 x 8	03-50034
E	1	Torx Bit T20	03-50066
F	1	Trim Seal, 26" L	05-00072
G	1	Coupling, 3-1/2"x3-3/4"	05-01203
H	1	Clamp T-bolt, 8-5/16"-8-5/8"	03-50267
I	2	Clamp T-bolt, 3-3/4" - 4-1/16"	03-50265
J	1	Plug, Housing	05-01202
K	1	Plate, Mounting	05-01291

Installation will require the following tools:
Phillips screw driver, 8mm nut driver, 10mm and 11mm socket, and extension.

Note: Legal in California for use on race vehicles only. The use of this device on vehicles used on public streets or highways is strictly prohibited in California and others states that have adopted California emission regulations.

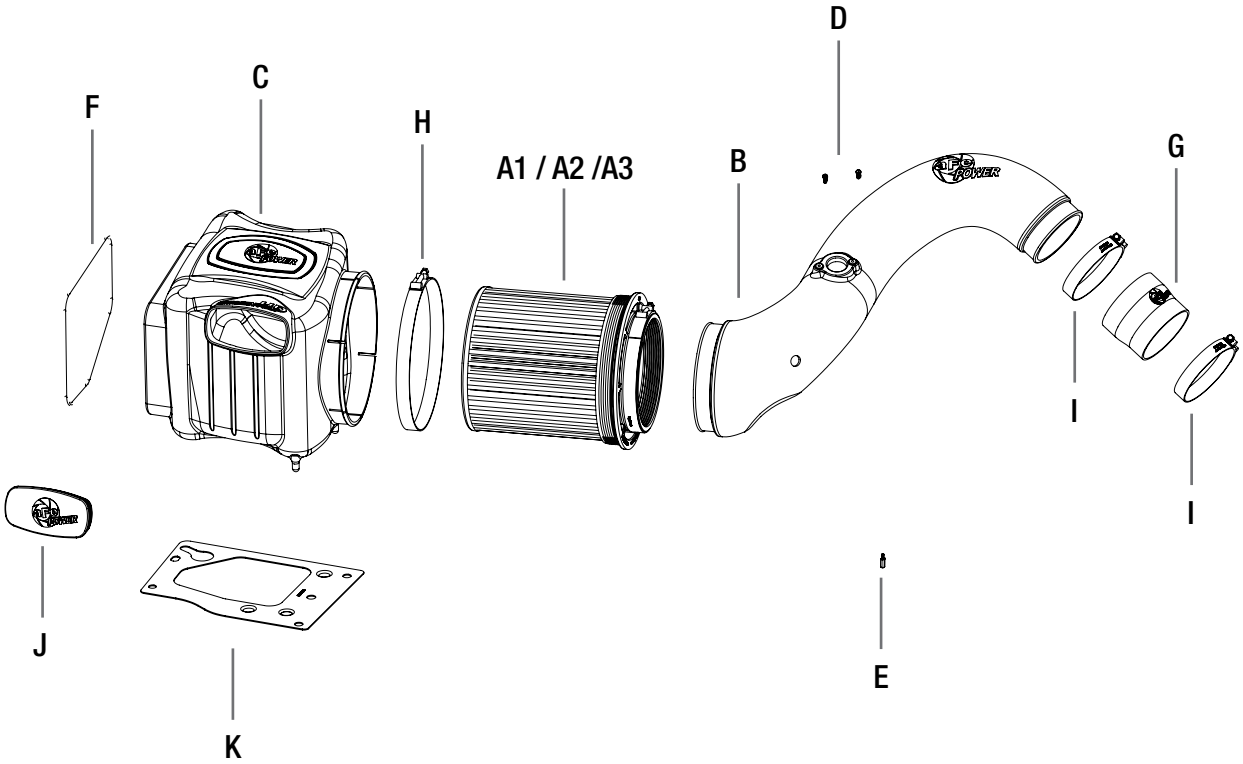
D
C
F
H
A1 / A2 /A3
B
G
I
I
J
E
K

Figure A

Refer to Figure A for step 1-3

Step 1: Disconnect Mass Air Flow Sensor (MAF) 1 .

Step 2: Loosen all Intake tube Clamps 2 using a 8mm Nut Driver.

Step 3: Remove the factory intake tube and air box out of the vehicle.

(Use an upward pull to release the air box from its mounting grommets)

Figure B

Refer to Figure B for steps 4

Step 4: Remove the factory aluminum foil (3) from the inside of the fender to allow more cold air to the airbox.

Figure C

Refer to Figure C for step 5

Step 5: Remove the factory air box mounting plate and replace with the aFe mounting plate (4) using the factory bolts.Transfer the factory mounting grommets from the factory plate to the aFe mounting plate.

Figure D

Refer to Figure D for step 6

Step 6: Slide the air filter in the Air Box. Install supplied T-bolt Clamps.

(Do not tighten clamps at this time)

Figure E

Refer to Figure E for steps 7-8

Step 7: Install the trim seal (5) on the edge of the Momentum HD Air Box.

Step 8: Remove the retaining plug (6) from the Factory Air Box and install it on the Momentum HD air box.

Figure F

Refer to Figure F for step 9

Step 9: Install the Momentum HD air box into the vehicle. Firmly push down into the factory mounting grommets.

(Use the supplied plug to close the additional air inlet if you want a completely sealed air box)

Figure G

Refer to Figure G for steps 10-14

Step 10: Remove the MAF Sensor from the factory intake tube using T-20 torx Bit.

Step 11: Remove the Filter minder and the grommet it sits in from the factor air box.

Step 12: Install the MAF Sensor In the Momentum Intake tube using supplied screws.

Step 13: Install the factory grommet for the filter minder on the Momentum HD Intake Tube. Firmly push the filter minder into the grommet on the Intake tube.

Step 14: Install the furnished silicone hump coupler and the T-bolt Clamps on the aFe intake Tube. (Do not tighten clamps at this time)

Figure H

Refer to Figure H for steps 15-18

Step 15: Install the momentum HD intake tube into the vehicle. Slide the coupling into the filter side first, then rotate the tube down and slide it onto the turbo inlet.

Step 16: Tighten all the T-bolt clamps.

Step 17: Reconnect the MAF Sensor.

Step 18: Your installation is now completed.

Pro DRY S Air Filter

P/N: 21-91059

Pro 5R Air Filter

P/N: 24-91059

Pro 10R Air Filter

P/N: 20-91059

Pro-GUARD 7

P/N: 72-91059

Blue Squeeze Restore Kit

P/N: 90-50501

Blue Aerosol Restore Kit

P/N: 90-50001

Pro DRY S Restore Kit

P/N: 90-59999

Pre-Filter

P/N: 28-10273

To purchase any of the items above, view airflow charts, dyno graphs, photos, and video; please go to aFepower.com.

Page left blank intentionally

Page left blank intentionally

Warranty

General Terms:

- aFe warrants their products to be free from manufacturer's defects due to workmanship and material.
- This warranty applies only to the original purchaser of the product and is non-transferrable.
- Proof of purchase of the aFe product is required for all warranty claims.
- Warranty is valid provided aFe instructions for installation and/or cleaning were properly followed.
- Proper maintenance with regular inspections of product is required to insure warranty coverage.
- Damage due to improper installation, abuse, unauthorized repair or alteration is not warranted.
- Incidental or consequential damages or cost, including installation and removal of part, incurred due to failure of aFe product is not covered under this warranty.
- All warranty is limited to the repair and/or replacement of the aFe part. To request Return Goods Authorization ("RGA"), email RGA@afepower.com or call (951)493-7100. Upon receipt of the RGA, you must return the product to the address provided in the RGA, freight prepaid and accompanied with a dated proof of purchase and the RGA. Upon receipt of the defective product and upon verification of proof of purchase, aFe will either repair or replace the defective product within a reasonable time, not to exceed thirty days.

Product Category	P/N Prefix	Warranty duration
Direct OE Replacement Filters	10, 11, 30, 31, 71, 73	Life of the vehicle
Racing Filters	18	1 year
Universal	21, 24, 72,TF	2 years
Air Intake Systems	50, 51, 54, 55, 75,TR,TA,TL	2 years
Exhaust Systems	49	2 years
Intercoolers & Intercooler Tubes	46-2	2 years
Intake Manifolds	46-1	2 years
Differential Cover	46-7	Life of the vehicle
Exhaust Manifolds	46	2 years
Throttle Body Spacers	46-3	2 years
Turbochargers	46-6	2 years*
Fluid Filters	44	90 days
Pre-Filters	28	2 years
Heavy Duty OE Replacement	70	2 years
PowerSports OE Replacement	81, 87	2 years
PowerSports Intake Systems	85	2 years

No other warranty expressed or implied applies nor is any person or advanced FLOW engineering authorized to assume any other warranty. Some States do not allow the exclusion or limitation of incidental or consequential damages or do not allow limitations on how long an implied warranty lasts, so the above limitations or exclusions may not apply to you. This warranty gives you specific legal rights, and you may also have other rights which vary from State to State.

*See turbocharger warranty for more info

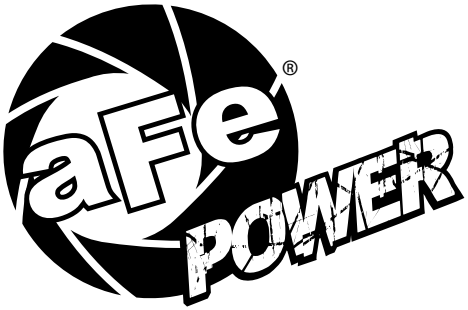

advanced FLOW engineering, inc.
252 Granite Street Corona, CA 92879
TEL: 951.493.7100

P/N: 06-80593