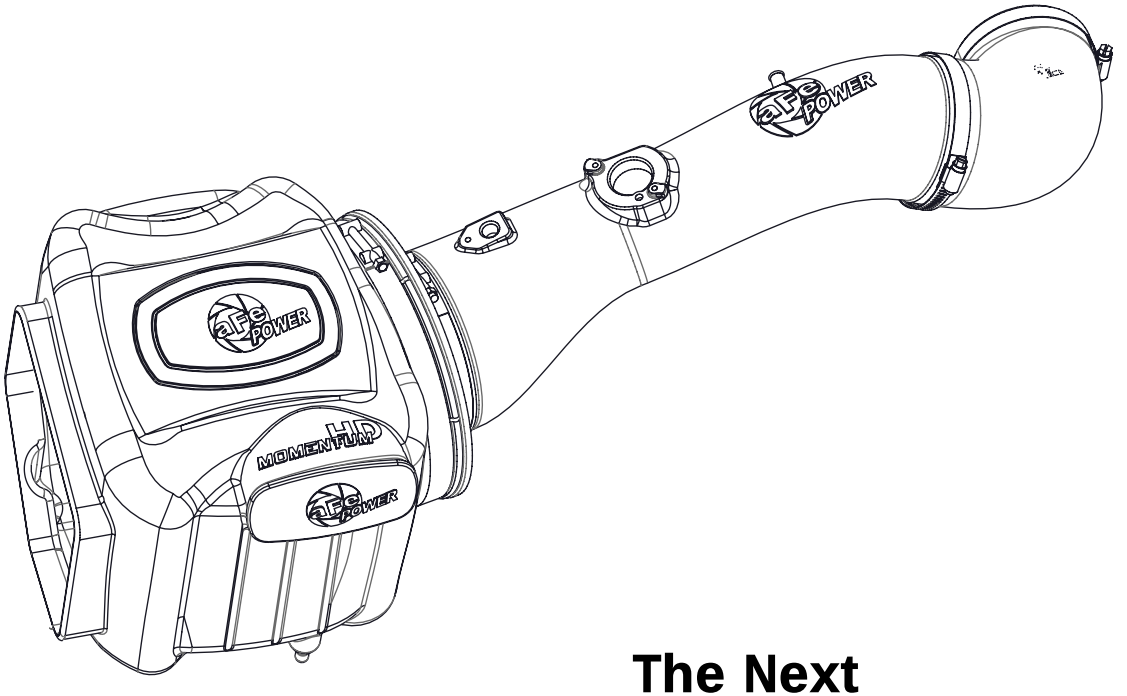

The Next Generation of Intakes

advanced FLOW engineering

Instruction Manual P/N: 51-74105 / 54-74105

Make: **Chevrolet / GMC** Model: **Trucks / SUVs** Year: **2009-2015** Engine: **V8-6.0L**

- **Please read the entire instruction manual before proceeding.**
- **Ensure all components listed are present.**
- **If you are missing any of the components, call technical support at 951-493-7100 or e-mail tech@afepower.com.**
- **Ensure you have all necessary tools before proceeding.**
- **Do not attempt to work on your vehicle when the engine is hot.**
- **Disconnect both the negative battery terminal before proceeding.**

Retain factory parts for future use.

Label	Qty.	Description	Part Number
A1	1	Pro 5R (Blue Media)	24-91072
A2	1	Pro DRY S (Grey Media)	21-91072
B	1	Housing	05-82302B2
C	1	Tube	05-74105B1
D	1	Plug, Urethane	05-01202
E	1	Seal Trim (7/16") (26 inches)	05-00072
F	1	Clamp, T-bolt (8-5/16")	03-50267
G	2	Clamp, 072 (3" - 5")	03-50010
H	1	Coupling, Reducer (4.15" x 3.75")	05-01367
I	2	Screw, M4	03-50491
J	13	Hose, Fuel (3/8")	05-00110
K	2	Clamp, Mini 006	03-50025
L	1	Screw, M6	03-50052
M	1	Plug, MAP	05-01394

Installation will require the following tools:
8mm, 10mm socket or nut driver, Pliers, flat screw driver.

Note: Not legal for use in California. The use of this device in any on-road or off-road vehicles registered with the California Dept of Motor Vehicles (DMV) is strictly prohibited.

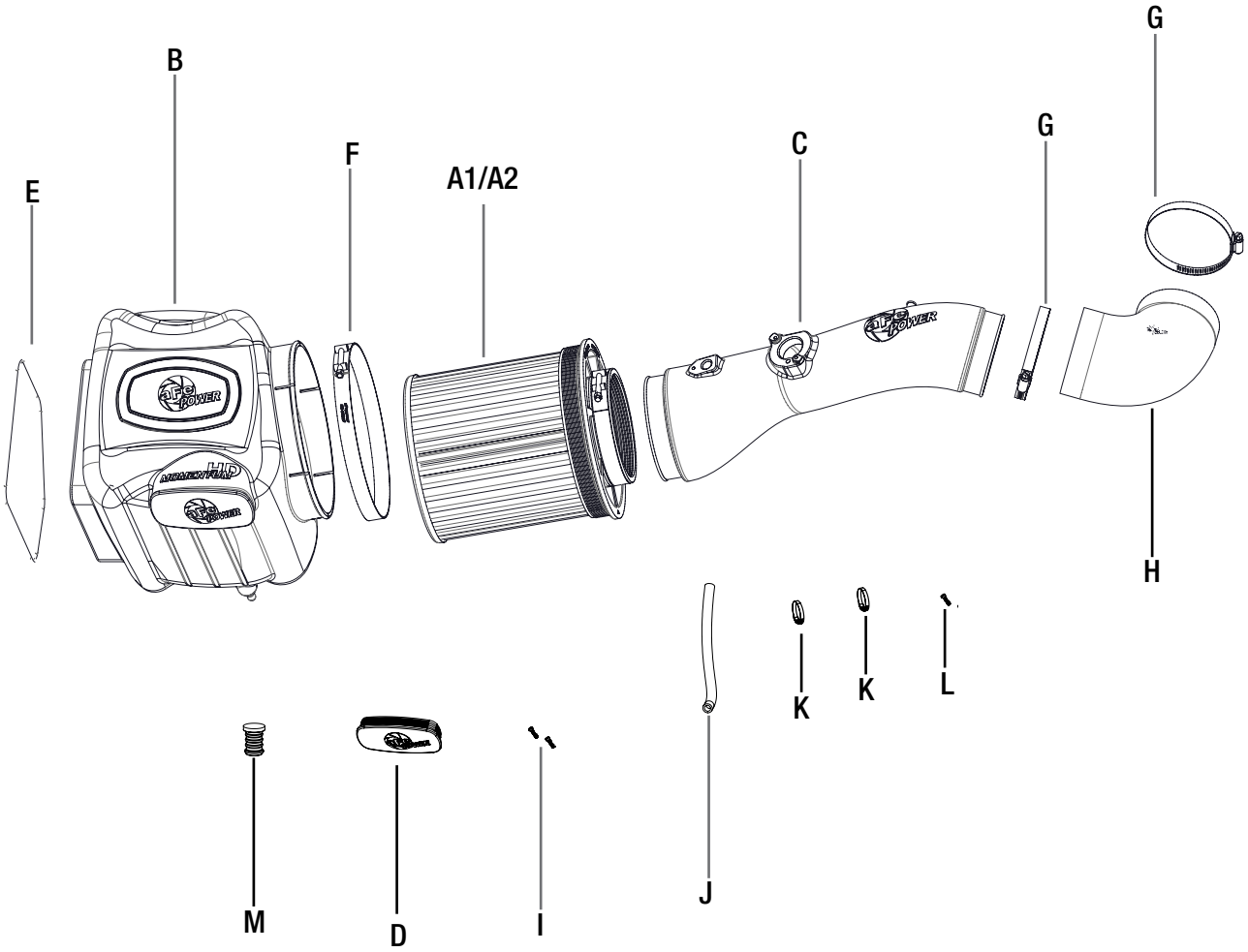
G
B
G
F
C
A1/A2
E
H
K
K
L
J
M
D
I

Figure A

Refer to Figure A for steps 1-3

Step 1: Disconnect the MAF sensor and Temp sensor plug from the OE airbox (1).

Note: Vehicles from 2009-2010 do not have a temp sensor.

Step 2: Loosen clamp from OE airbox housing and OE Intake tube (2) .

Step 3: Loosen clamp from throttle body (3).

Figure B

Refer to Figure B for step 4

Step 4: Disconnect OE intake tube from the radiator hose clip.

Figure C

Refer to Figure C for steps 5-6

Step 5: Remove the OE crank case breather plug from the resonator chamber (as shown) and remove it from where it attaches to the engine.

Step 6: Pull the complete factory air intake system (tube and housing) out of the vehicle.

Figure D

Refer to Figure D for steps 7-8

Step 7: Slide the afe filter into the momentum HD air box. Install furnished T-bolt clamps. Do not tighten at that time.

Step 8: If you want to completely seal the air box, use the furnished plug (4) to close the auxiliary air inlet off.

Figure E

Refer to Figure E for steps 9-10

Step 9: Install the trim seal (5) on the edge of the momentum HD air box.

Step 10: Transfer the retaining plug (6) from the bottom of the factory air box to the momentum HD air box.

Figure F

Refer to Figure F for steps 11-13

Step 11: Remove the mass air flow sensor from the factory air box using the T15 torx bit or driver.

Step 12: Install the MAF and temp sensors onto the aFe intake tube using the supplied screws. Use the longer screw for the temp sensor. For vehicles without a temp sensor, install the supplied plug (7).

Step 13: Install the furnished coupling and clamps on small end of the aFe intake tube. Do not tighten clamps at this time.

Figure G

Refer to Figure G for step 14

Step 14: Install the aFe air box into the vehicle by firmly pushing it into the factory mounting grommets.

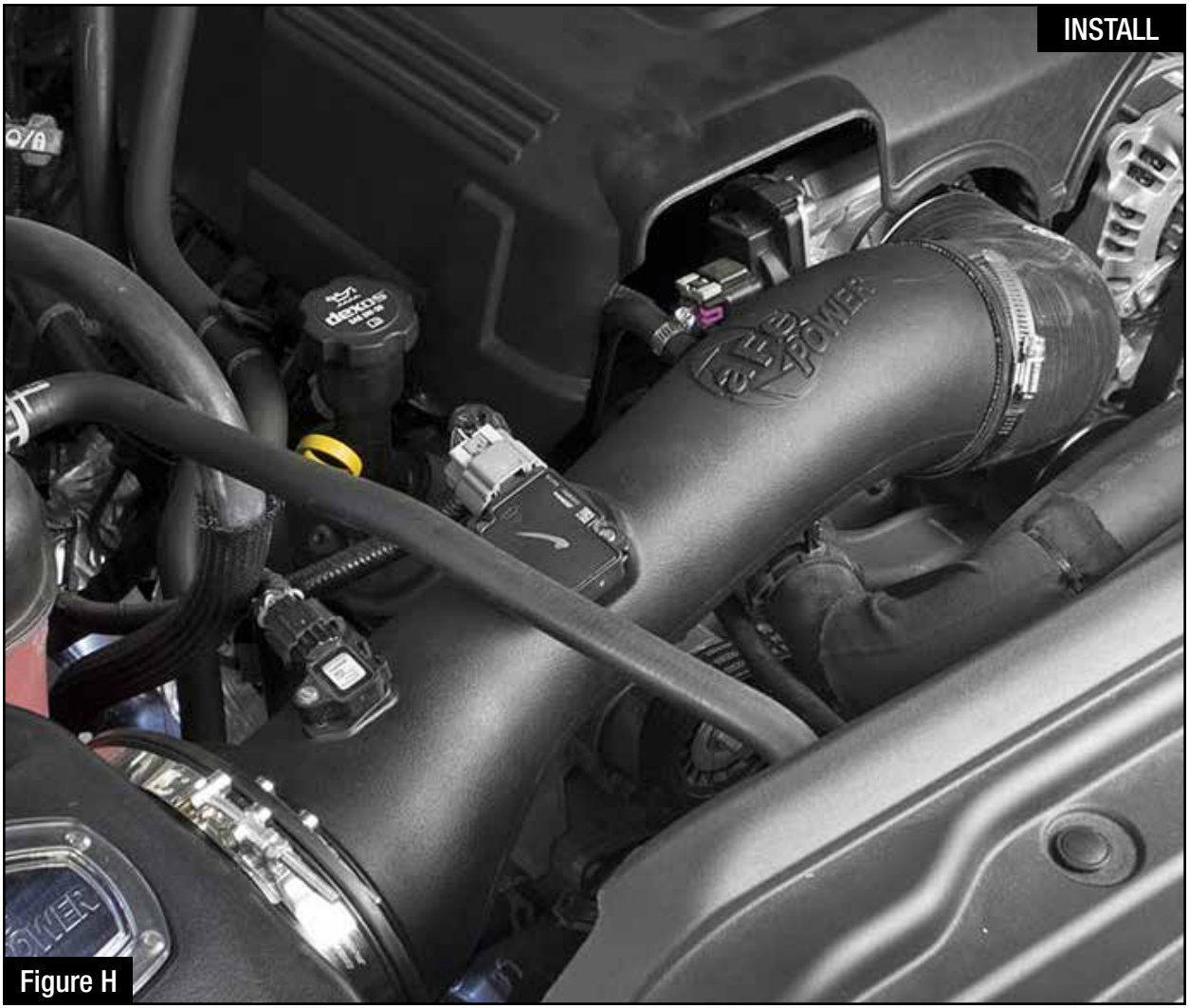

Figure H

Refer to Figure H for step 15-16

Step 15: Install the intake tube into the vehicle. Slide the tube in the filter, then the coupling over the throttle body.

Step 16: Align the tube correctly then tighten all clamps.

Figure I

Refer to Figure I for steps 17-19

Step 17: Install the crankcase breather hose (8) with the provided hose and mini clamps, then connect the valve cover to the aFe tube.

Step 18: Reconnect the mass air flow sensor and temperature sensor (9).

Step 19: Make sure all clamps and connection are secured. Your installation is now completed.

NOTE: Retighten all connections after approximately 100-200 miles.

Page left blank intentionally

Pro DRY S Air Filter

P/N: 21-91072

Pro 5R Air Filter

P/N: 24-91072

Pre-Filter

P/N: 28-10273

Pro DRY S Restore Kit

P/N: 90-59999

Blue Squeeze Restore Kit

P/N: 90-50501

Headers

P/N: 48-44001

Sprint Booster

P/N: 77-14003

Oil Filter

P/N: 44-LF012

To purchase any of the items above, view airflow charts, dyno graphs, photos, and video; please go to aFepower.com.

Warranty

General Terms:

- aFe warrants their products to be free from manufacturer's defects due to workmanship and material.
- This warranty applies only to the original purchaser of the product and is non-transferrable.
- Proof of purchase of the aFe product is required for all warranty claims.
- Warranty is valid provided aFe instructions for installation and/or cleaning were properly followed.
- Proper maintenance with regular inspections of product is required to insure warranty coverage.
- Damage due to improper installation, abuse, unauthorized repair or alteration is not warranted.
- Incidental or consequential damages or cost, including installation and removal of part, incurred due to failure of aFe product is not covered under this warranty.
- All warranty is limited to the repair and/or replacement of the aFe part. To request Return Goods Authorization ("RGA"), email RGA@afepower.com or call (951)493-7100. Upon receipt of the RGA, you must return the product to the address provided in the RGA, freight prepaid and accompanied with a dated proof of purchase and the RGA. Upon receipt of the defective product and upon verification of proof of purchase, aFe will either repair or replace the defective product within a reasonable time, not to exceed thirty days.

Product Category	P/N Prefix	Warranty duration
Direct OE Replacement Filters	10, 11, 30, 31, 71, 73	Life of the vehicle
Racing Filters	18	1 year
Universal	21, 24, 72	2 years
Air Intake Systems	50, 51, 54, 55, 75	2 years
Exhaust Systems	49	2 years
Intercoolers & Intercooler Tubes	46-2	2 years
Intake Manifolds	46-1	2 years
Differential Cover	46-7	Life of the vehicle
Exhaust Manifolds	46	2 years
Throttle Body Spacers	46-3	2 years
Fluid Filters	44	90 days
Pre-Filters	28	2 years
Heavy Duty OE Replacement	70	2 years
PowerSports OE Replacement	81, 87	2 years
PowerSports Intake Systems	85	2 years

No other warranty expressed or implied applies nor is any person or advanced FLOW engineering authorized to assume any other warranty. Some States do not allow the exclusion or limitation of incidental or consequential damages or do not allow limitations on how long an implied warranty lasts, so the above limitations or exclusions may not apply to you. This warranty gives you specific legal rights, and you may also have other rights which vary from State to State.

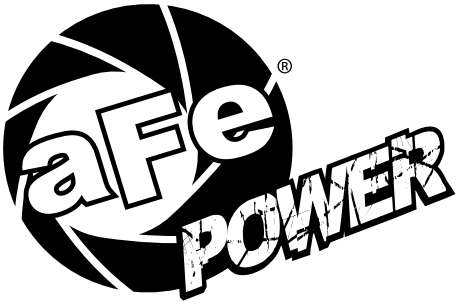

advanced FLOW engineering, inc.
252 Granite Street Corona, CA 92879
TEL: 951.493.7155 • TECH: 951.493.7100

P/N: 06-80814